BRIESS®
MALT & INGREDIENTS Co.
All Natural Since 1876

Practical Milling for the Craft Brewer

Bob Hansen

Briess Malt & Ingredients Co.

April 2007

Milling: Definitions or objectives

Mill(v) to grind into a grist, flour, meal or powder

Milling ultimately is a compromise that each brewmaster reaches with

a batch of grain. Their objectives are to find an acceptable middle

ground between:

- Yield
- Separation Efficiency (Lautering)
- Quality

To mill or not to mill

		Sieve Analysis				Yield		
Malt Type	**Mash**	**14**	**30**	**60**	**Pan**	**As Is**	**Efficiency**	**Color**
Whole Kernel	Manual	100				18.2	24%	1.9*
Pilot Mill Coarse	Manual	84	13	2	1	70.7	94%	2.0
Pilot Mill Normal	Manual	30	42	15	13	71.0	94%	2.0
Lab Mill Coarse	Manual	10	59	15	16	75.5	100%	2.0
Lab Mill Fine	Manual	1	8	54	37	75.8	100%	2.1
Whole Kernel	Stirrer	100				27.9	37%	1.9*
Pilot Mill Coarse	Stirrer	84	13	2	1	74.2	98%	2.2
Pilot Mill Normal	Stirrer	30	42	15	13	76.1	101%	2.2
Lab Mill Coarse	Stirrer	10	59	15	16	75.4	100%	2.1
Lab Mill Fine	Stirrer	1	8	54	37	75.1	99%	2.2

Milling: What's 2% mean?

	#		#Yeild Loss	
Brls	Malt/Batch	Malt cost	2%	Cost/batch
3	130	$0.35	3	$0.91
5	217	$0.35	4	$1.52
7	304	$0.35	6	$2.13
10	434	$0.33	9	$2.86
15	651	$0.30	13	$3.91
20	868	$0.26	17	$4.51
25	1,085	$0.24	22	$5.21
50	2,170	$0.22	43	$9.55
85	3,689	$0.22	74	$16.23
100	4,340	$0.20	87	$17.36
350	15,190	$0.19	304	$57.72
600	26,040	$0.18	521	$93.74

Milling: What's 2% mean?

Brls/year	# Malt/year	Malt cost	#Yeild Loss 2%	$ Yearly loss
100	4,340	$0.35	87	$30
300	13,020	$0.35	260	$91
500	21,700	$0.35	434	$152
1,000	43,400	$0.33	868	$286
1,500	65,100	$0.31	1,302	$404
2,000	86,800	$0.30	1,736	$521
2,500	108,500	$0.28	2,170	$608
3,000	130,200	$0.26	2,604	$677
5,000	217,000	$0.25	4,340	$1,085
10,000	434,000	$0.24	8,680	$2,083
50,000	2,170,000	$0.22	43,400	$9,548
100,000	4,340,000	$0.20	86,800	$17,360
500,000	21,700,000	$0.19	434,000	$82,460
1,000,000	43,400,000	$0.18	868,000	$156,240
5,000,000	217,000,000	$0.18	4,340,000	$781,200

Milling: Effect on Quality

- Prevent Husk Going into Kettle
- Avoid Unground Kernels

What’s a Mill?

Mill(n) a machine or apparatus for grinding grain

Roller Mills, 2,4, 5 or 6…

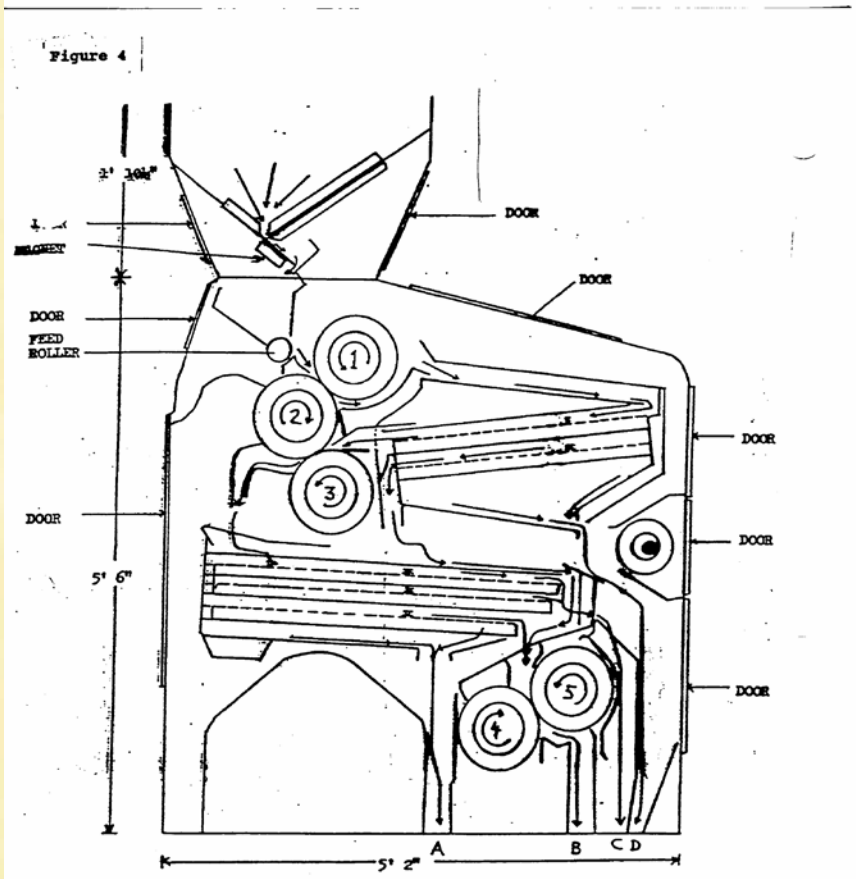

Roller Mills, Manufacturers

- Buhler
  www.Buhlergroup.com
- Kunzel
  www.Kunzel.de
- Roskamp-Champion
  www.CPMRoskamp.com

Pre and Post Mill Milling: Grain Handling

- “Milling” doesn’t end until Mash in
- Conveying equipment can be almost as important as milling

Milling: Costs-Small Brewery

	Low	High
Mill	$4,000	$6,000
Auger	$1,500	$2,500
Grist Case	$4,000	$6,000
Installation	$500	$2,000
Total Basic Cost	$10,000	$16,500
Mill room	$900	$15,000
Total Possible Basic Cost	$10,900	$31,500
Silo	$15,000	$18,000
Auger	$1,500	$2,500
Total Cost w/Silo	$27,400	$52,000
Additional Costs		
Load cells	$4,000	$6,000
Dump scale	$500	$1,000

To Mill or not to Mill II: Preground Savings

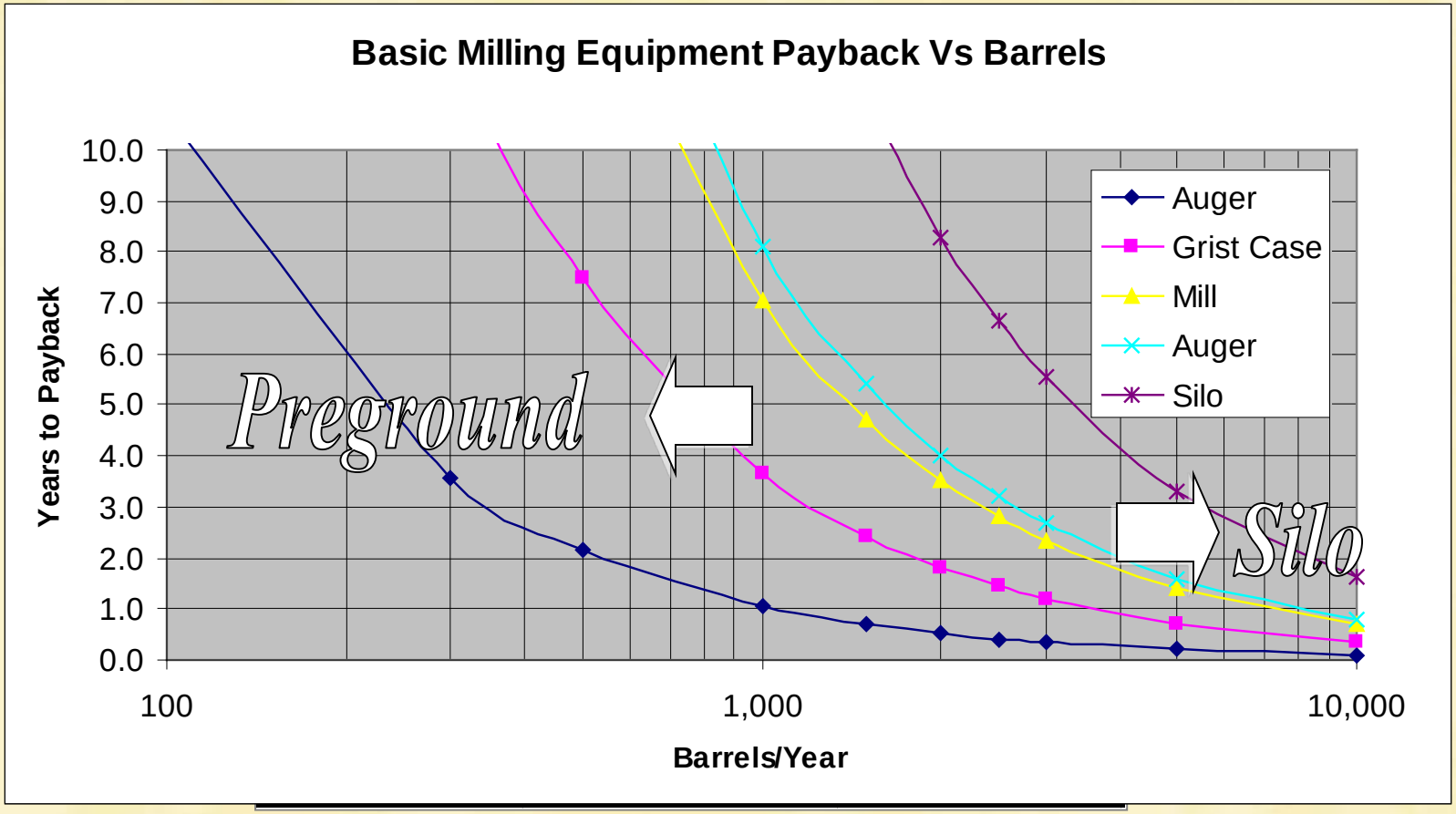

Milling: Making the most of your Grist

Grain
Type/Assortment

Mill settings

Grind Profile

Brewhouse
Performance

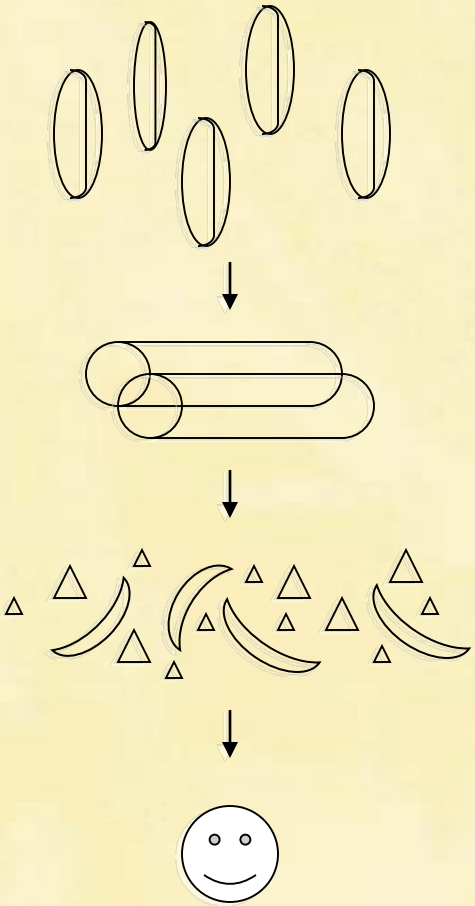

Sieve analysis

Equipment Needed

Recommended Sieves

- No 14..... 1.40mm opening
- No 30..... 0.600mm opening
- No 60..... 0.250mm opening
- Pan
- Cover

Balances

- Portable Balance
- Capacity Minimum 500gms
- Readability 0.1g – 1 g

Grist Profile Methods

Standard Sieve Test

This procedure is for the classification of malt grist from mill grinding by sieve analysis. The method employs a mechanical shaker for sieving a quantity of grist through standard sieves

Ro-Tap Sieve Shaker

The Rotap Testing Sieve Shaker accurately reproduces the circular and tapping motion given testing sieves in hand-sieving, but with a uniform, mechanical action assuring dependable, comparable tests.

Tyler Coarse Sieve Shaker

This low cost shaker is designed to be used in coarse testing application. Well suited for preground grist evaluation. A specially designed mechanism provides a shaking action resulting in consistent, accurate results.

Manual Sieve Test

The method employs manual shaking of U.S. standard test sieves for sieving a quantity of grist through four standard sieves.

Costs

	Standard Ro-Tap Method	**Standard Shaker Method**	**Manual Sieve Method**
Ro-Tap Shaker	$1695.00		
Coarse Sieve Shaker		$1000.00	
# 14 Sieve	$29.99	$29.99	$29.99
# 30 Sieve	$29.99	$29.99	$29.99
# 60 Sieve	$29.99	$29.99	$29.99
Pan	$19.70	$19.70	$19.70
Cover	$14.95	$14.95	$14.95
Balance	$144.00	$144.00	$144.00
Total Cost	**$1963.62**	**$1268.62**	**$268.62**

Suppliers

Ro-Tap Shakers and Sieves

- VWR Scientific www.vwrsp.com
- Fisher Scientific www.fishersci.com
- ASC Scientific www.ascscientific.com

Balances

Affordable Scales www.affordablescales.com

Citizen Balances www.citizen.com

Cynmar Scientific www.cynmar.com

VWR

Evaluating Brewhouse Efficiency

$$\text{Yield} = \frac{\text{S.G.} \times \text{Lbs of Wort} \times \text{Gals of Wort} \times \text{Pct Solids of Wort} / 100}{\text{Lbs Starting Grain}}$$

$$\text{Brewhouse Efficiency} = \frac{\text{Yield Obtained}}{\text{Maximum Yield As Available}}$$

Evaluating Brewhouse Efficiency

$$\text{Yield} = \frac{1{,}064.8 \times 8.34\ \#/\text{Gal} \times 61.0 \times 1.12 \text{ Plato} / 100}{450 \text{ Lbs Starting Grain}} = 72.3\%$$

$$\text{Brewhouse Efficiency} = \frac{72.3\% \text{ Yield Obtained}}{78.0\% \text{ Coarse Grind As-Is Yield}} = 92.6\%$$

Evaluating Brewhouse Performance

- Collection Time
- Quality
  - Sensory Panel

Optimizing Example

Assortm

Mill set	**an**
Coarse	4
Normal	3
Fine	0

Optimizing Example

Mill settings	Roller Gap top	middle	bottom	Retained 14	30	60	pan
Coarse	13.0	10.5	11.0	78	14	4	4
Normal	10.0	8.0	6.0	53	28	11	8
Fine	6.5	3.3	2.8	25	25	31	20

	Yeild	Brewhouse efficiency	Collection Time (min)
Coarse	64%	85%	96
Normal	68%	91%	94
Fine	69%	92%	143

Effect on Lautertun Performance

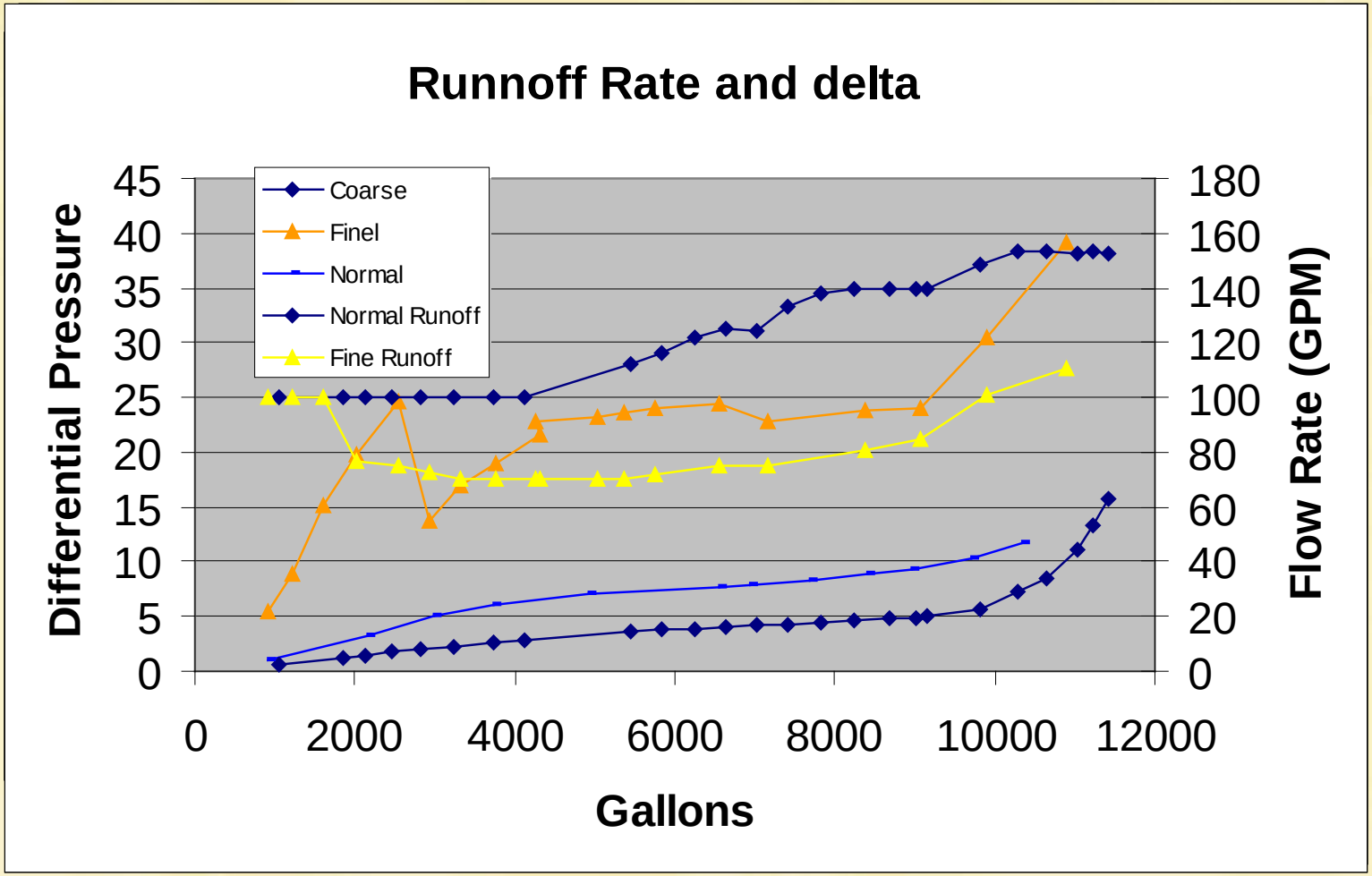

Plant Trial: Quality

No Significant Differences In:

- Color
- Turbidity
- Sensory

Practical Milling Guidelines for Craft Brewers

	14	30	60	pan	Max Eff
Trouble Free	70-85	10-20	<10	<5	**95%**
Practical	45-55	25-50	<10	<7	**98%**
Industrial M	30-35	40-60	5-15	<10	**100%**
Industrial LT	30-35	40-55	5-15	<10	**100%**
MF	10-20	20-40	40-50	10-20	**102%**

Other Considerations

Milling Specialty Malts

Mill Maintenance

Summary

Brls	# Malt/Batch	Malt cost	#Yeild Loss 2%	Cost/batch
3	130	$0.35	3	$0.91
5	217	$0.35	4	$1.52
7	304	$0.35	6	$2.13
10	434	$0.33	9	$2.86
15	651	$0.30	13	$3.91
20	868	$0.26	17	$4.51
25	1,085	$0.24	22	$5.21
50	2,170	$0.22	43	$9.55
85	3,689	$0.22	74	$16.23
100	4,340	$0.20	87	$17.36
350	15,190	$0.19	304	$57.72
600	26,040	$0.18	521	$93.74

Milling is a compromise every brewer makes based on their:

- Equipment
- Funding
- Time
- Patience

Summary

- Most small brewers (<1,000) brls should consider preground.
- Brewers (esp >5,000brls) can gain by controlling and monitoring their grind
- Low cost systems can be set up
- Large brewers chase extract every where they can.

Thank You